016.40.121 1561 041199 DONADINI &

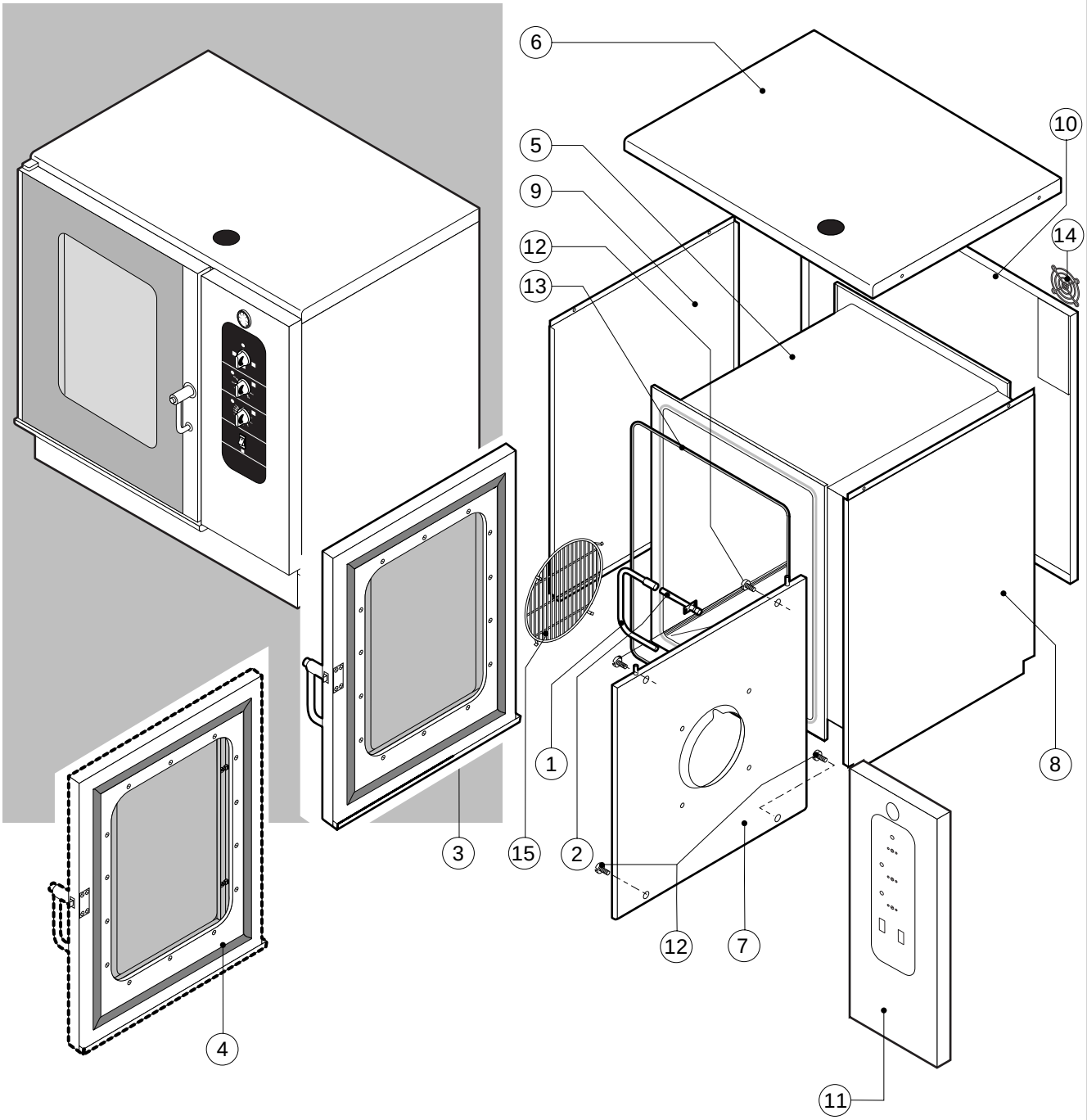

POS.	CODE	PIECES	DESCRIPTION
1	R10206480	1	SPRITZER EXTENSION
2	R10206540	1	SPRITZER UNION
3	R14100220	1	DOOR ASSEMBLY
4	R14100320	1	DOOR ASSEMBLY WITH LIGHTS
5	R14200050	1	COOKING CABINET ASSEMBLY
6	R14200490	1	COVER PANEL
7	R14200870	1	FAN GUARD PANEL ASSEMBLY
8	R14201490	1	RIGHT SIDE PANEL
9	R14201500	1	LEFT SIDE PANEL
10	R14201620	1	REAR PANEL
11	R14404230	1	CONTROL PANEL
12	R58006400	4	FAN GUARD FASTENING SCREW
13	R70042880	1	FRONT GASKET
14	R75300020	1	FAN GUARD GRID Ø 120
15	R75300090	1	FAN GUARD GRID Ø 350

POS.	CODE	PIECES	DESCRIPTION

016.40.121 1562 041199 DONADINI &

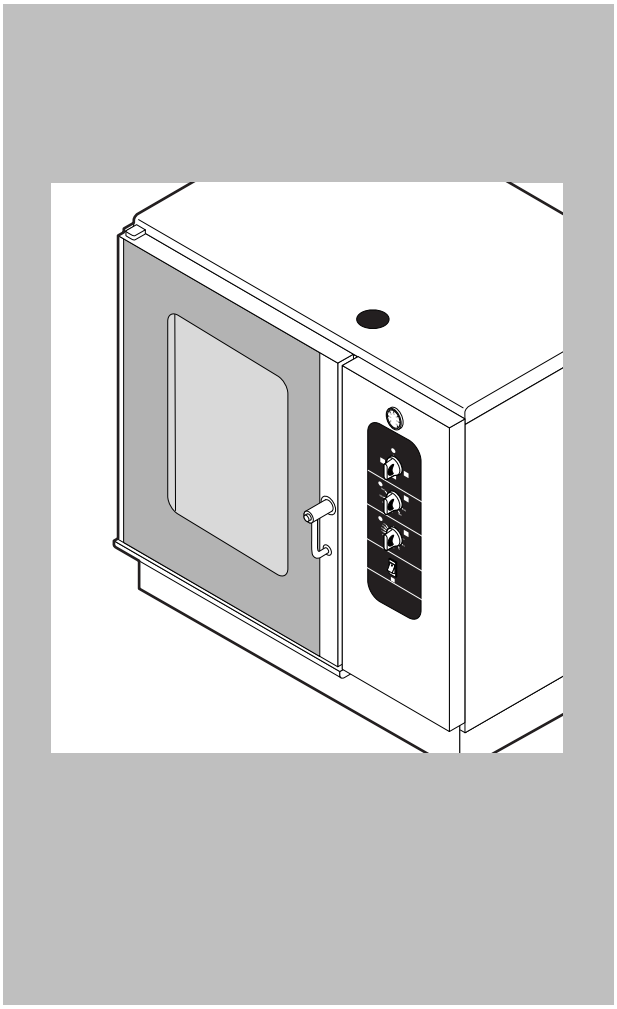

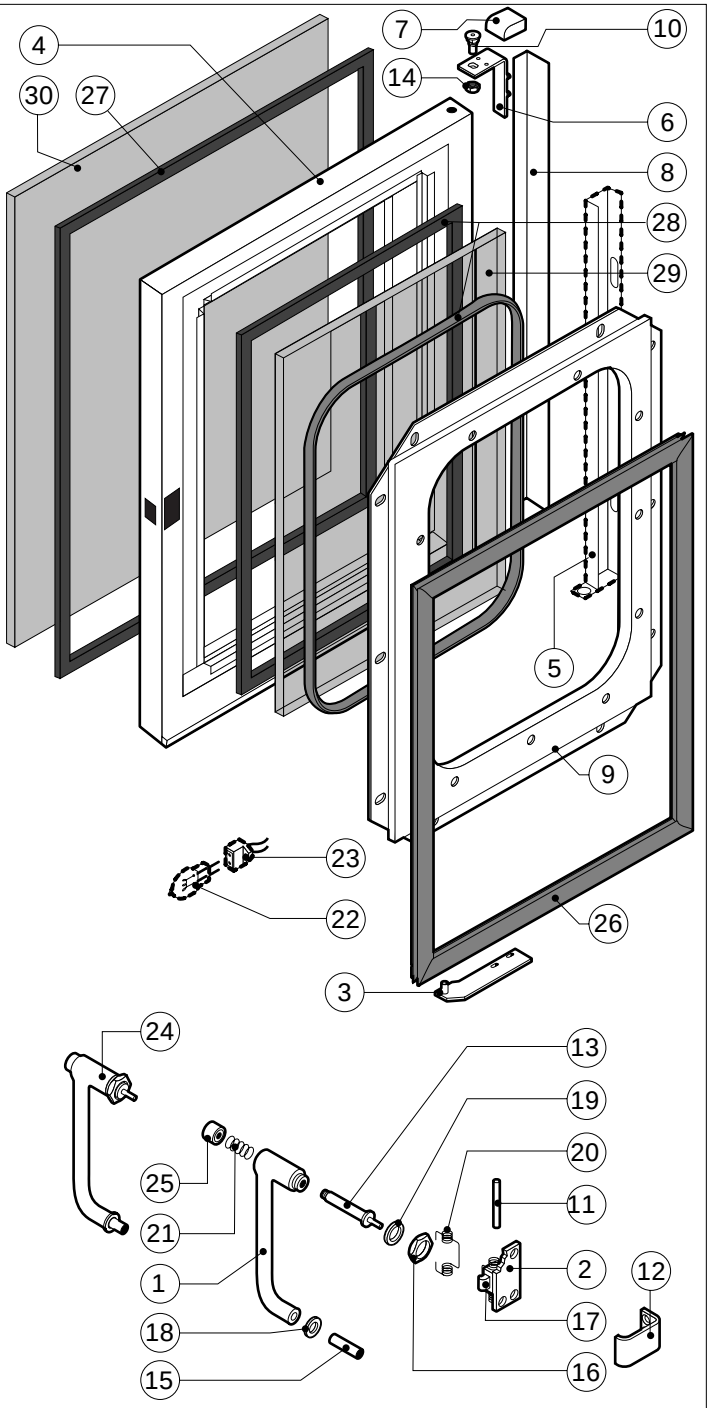

POS.	CODE	PIECES	DESCRIPTION
1	R09200230	1	DOOR HANDLE
2	R10100110	1	PRONG FLANGE
3	R12212250	1	LOWER DOOR HINGE
4	R14200740	1	DOOR
5	R14200790	1	LEFT LAMP COVER
6	R14200820	1	UPPER DOOR HINGE
7	R14200830	1	DOOR HINGE COVER
8	R14403440	1	LEFT GLASS FIXING BRACKET
9	R14406120	1	INNER DOOR PANEL
10	R58002150	1	HINGE PIN
11	R58002160	1	DOOR HANDLE PRONG PIN
12	R58002760	1	DOOR HANDLE PRONG COUPLER
13	R58003500	1	DOOR HANDLE BUTTON ROD
14	R58004050	1	NUT FOR UPPER DOOR HINGE
15	R58004320	1	DOOR HANDLE SPACER
16	R58004830	1	RING NUT M18x1
17	R58005050	1	DOOR HANDLE PRONG
18	R58005340	1	DOOR HANDLE LOWER INSULATION WASHER
19	R58005350	1	DOOR HANDLE UPPER INSULATION WASHER

POS.	CODE	PIECES	DESCRIPTION
20	R61620012	1	DOOR HANDLE CATCH SPRING
21	R61620041	1	DOOR HANDLE BUTTON SPRING
22	R65270020	2	LIGHT 20W 12V G4
23	R65270400	2	LIGHT SOCKET
24	R69015080	1	DOOR HANDLE ASSEMBLY
25	R69031190	1	DOOR HANDLE PUSH BUTTON
26	R70042580	1	DOOR GASKET
27	R70042680	1	FRONT GLASS GASKET
28	R70042780	1	REAR GLASS GASKET
29	R71020130	1	DOOR GLASS
30	R71200740	1	DOOR GLASS

016.40.121 1563 041199 DONADINI & C

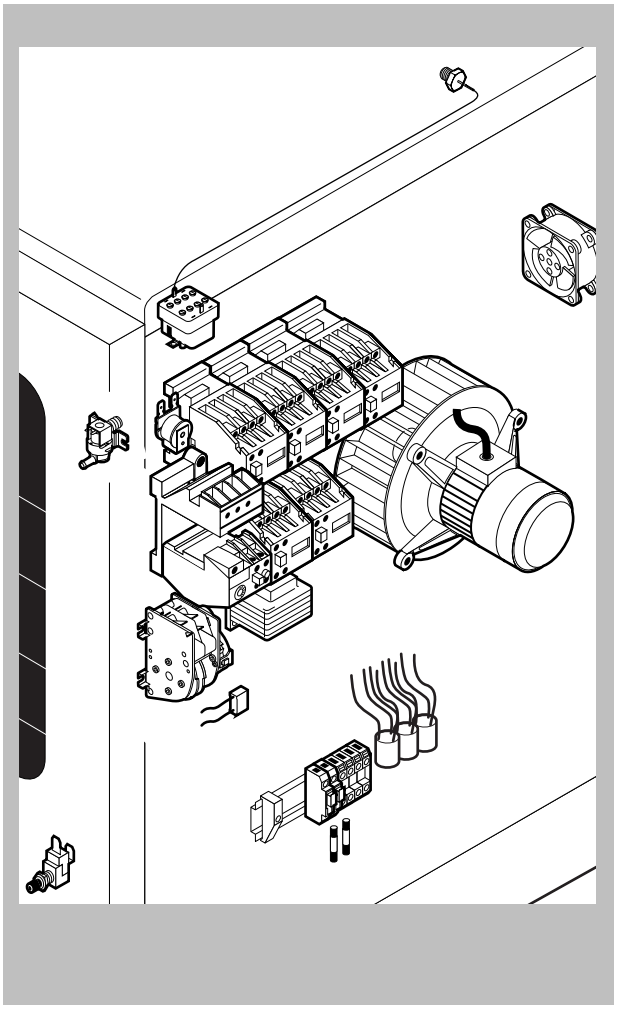

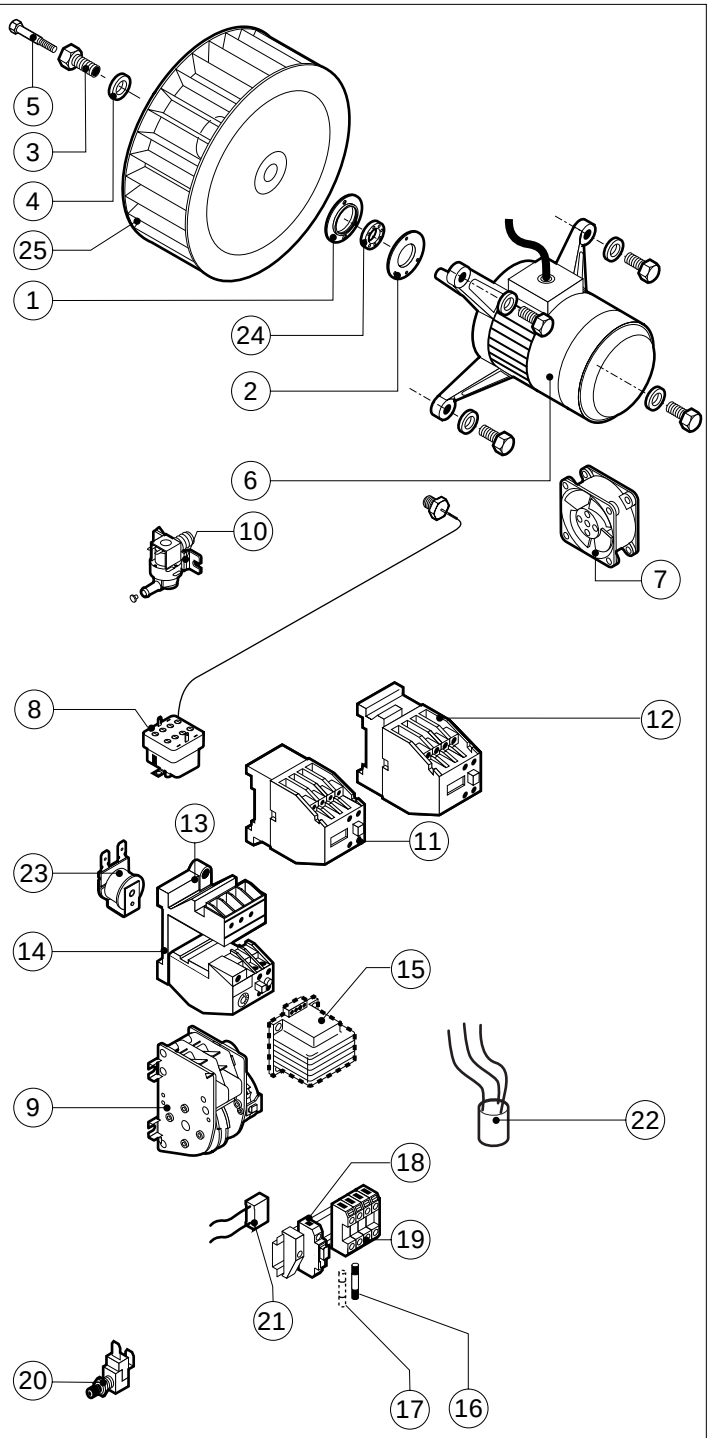

POS.	CODE	PIECES	DESCRIPTION
1	R58003840	1	MOTOR GASKET BRASS FLANGE
2	R58003850	1	MOTOR GASKET BRASS COUNTER FLANGE
3	R58004000	1	FAN SCREW M12x1.5 SX
4	R58004010	1	FAN WASHER Ø 30/12.5
5	R61020562	1	FAN SCREW TE A2 M6x55
6	R65040061	1	MOTOR HP 1 KIT
7	R65060050	1	COMPONENTS VENTILATION MOTOR Ø 120
8	R65070070	1	CHAMBER SAFETY THERMOSTAT
9	R65090190	1	REVERSING SWITCH 8'
10	R65115040	1	SOLENOID VALVE 220V 50HZ WITH FLOW REDUCER
11	R65140150	2	CONTACTOR 3TF4011-OAUO 240V
12	R65140240	4	CONTACTOR 3TF4211-OAUO 240V
13	R65160050	1	THERMIC SWITCH SUPPORT 3UX1418
14	R65160120	1	THERMIC PROTECTION 3UA5000-1C 1.6-2.5A
15	R65180430	1	TRANSFORMER 40VA
16	R65200200	1	FUSE 2A
17	R65200350	1	FUSE 0.4A (T)
18	R65210020	2	FUSE CARRIER
19	R65220130	1	TERMINAL BOARD

POS.	CODE	PIECES	DESCRIPTION
20	R65260540	1	DOOR SWITCH
21	R65280130	1	INTERFERENCE SUPPRESSOR
22	R65280200	3	INTERFERENCE SUPPRESSOR
23	R65330010	1	BUZZER
24	R70020050	1	MOTOR GASKET
25	R75400380	1	FAN Ø 350x120/24 50HZ P.D. KIT

016.40.121 1564 111199 DONADINI & C

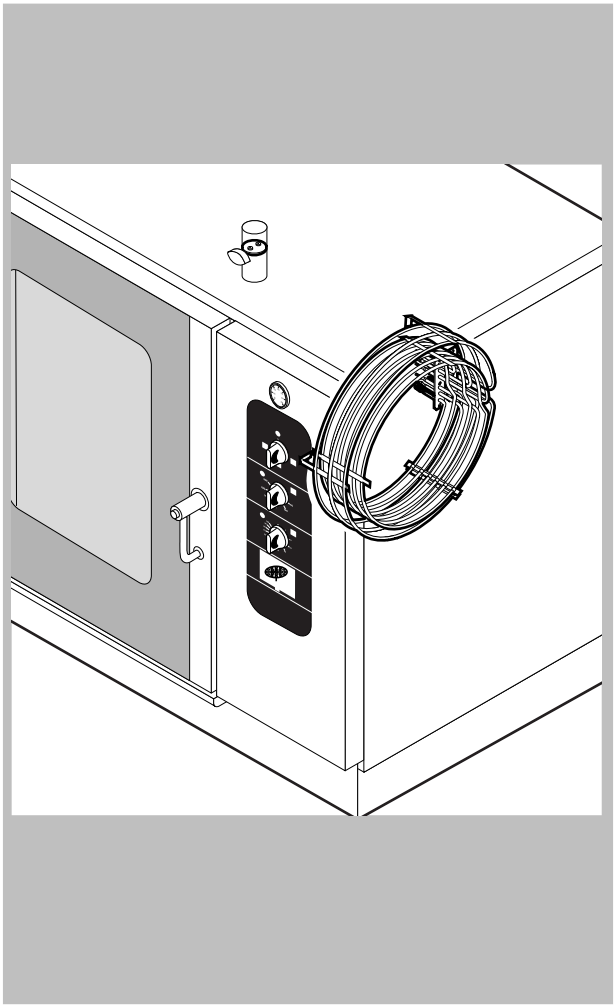

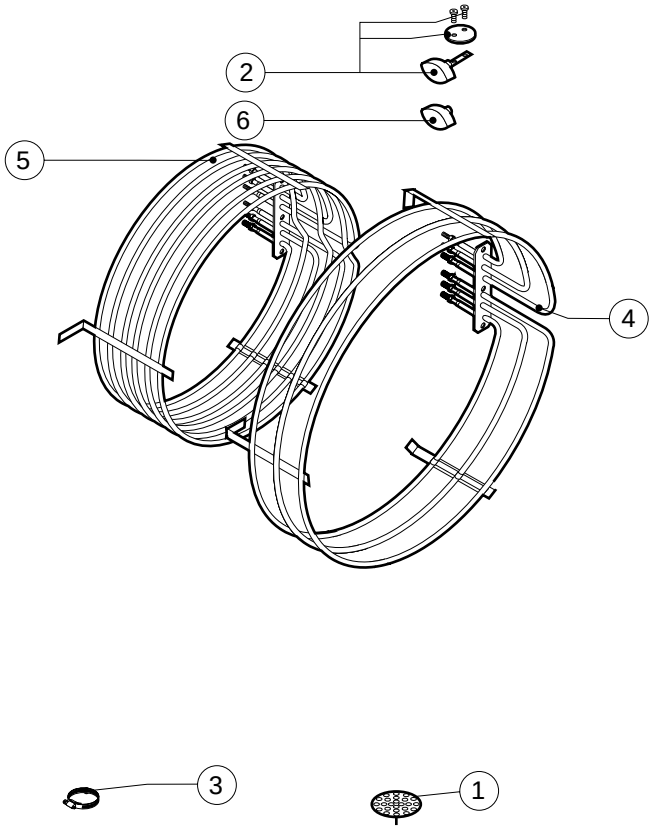

POS.	CODE	PIECES	DESCRIPTION
1	R10201700	1	DRAIN FILTER
2	R14201410	1	STEAM OUTLET THROTTLE ASSEMBLY
3	R61630011	2	METAL CLAMPS 12-22/9
4	R65011250	1	CHAMBER HEATING ELEMENT 15000W
5	R65011310	1	CHAMBER HEATING ELEMENT 15000W
6	R69010410	1	STEAM OUTLET KNOB

POS.	CODE	PIECES	DESCRIPTION

016.40.121 1565 041199 DONADINI & C

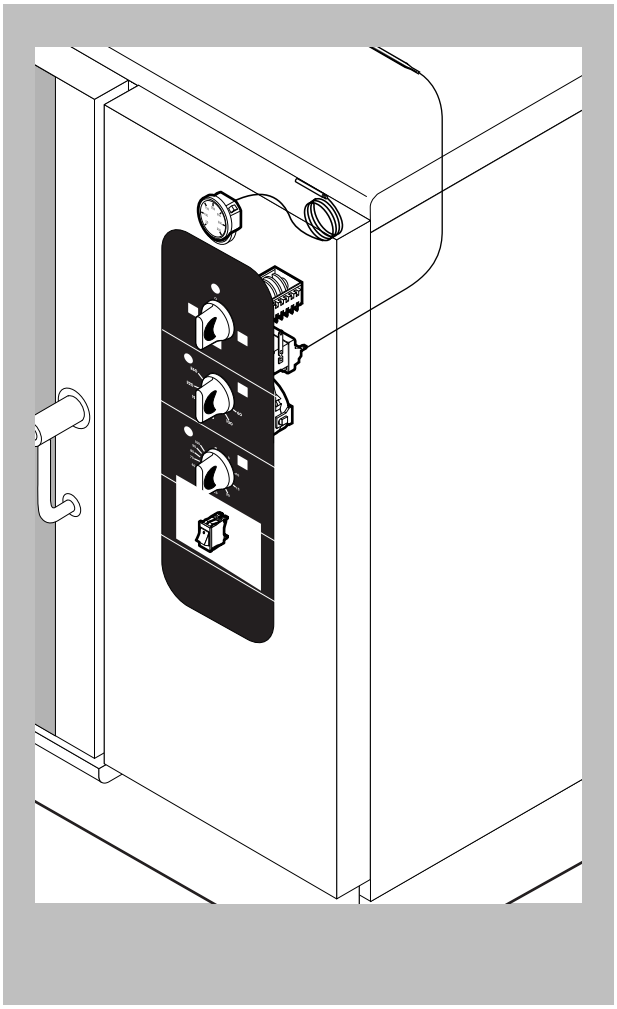

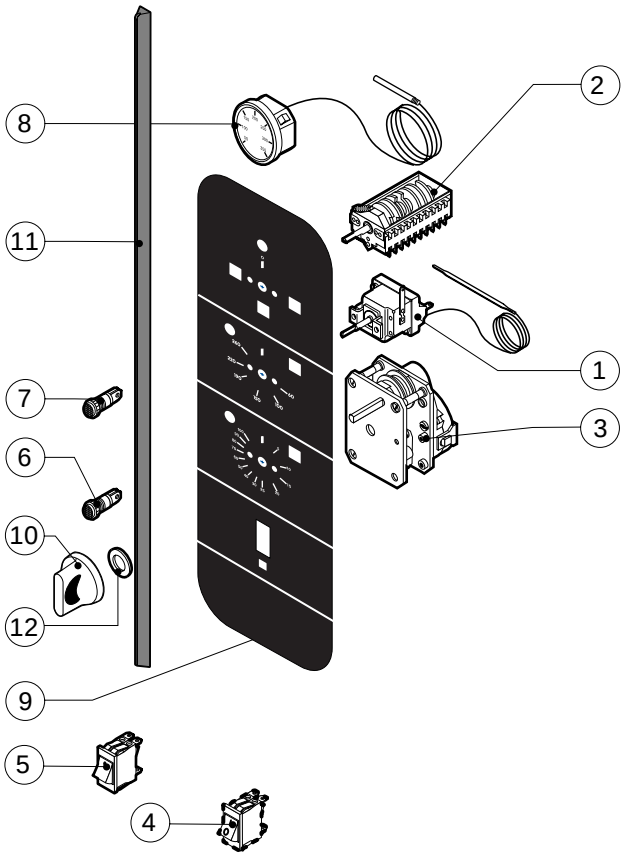

POS.	CODE	PIECES	DESCRIPTION
1	R65070210	1	CABINET THERMOSTAT 50/270°C
2	R65080010	1	MAIN SELECTOR SWITCH
3	R65090020	1	TIMER
4	R65260050	1	SWITCH
5	R65260510	1	HUMIDIFIER PUSH BUTTON
6	R65270220	2	ORANGE INDICATING LIGHT
7	R65270230	1	GREEN INDICATING LIGHT
8	R65340050	1	THERMOMETER
9	R67401360	1	MARENO PLATE
10	R69030170	3	KNOB KIT
11	R70042980	1	CONTROL PANEL GASKET
12	R70050020	6	KNOB GASKET

POS.	CODE	PIECES	DESCRIPTION