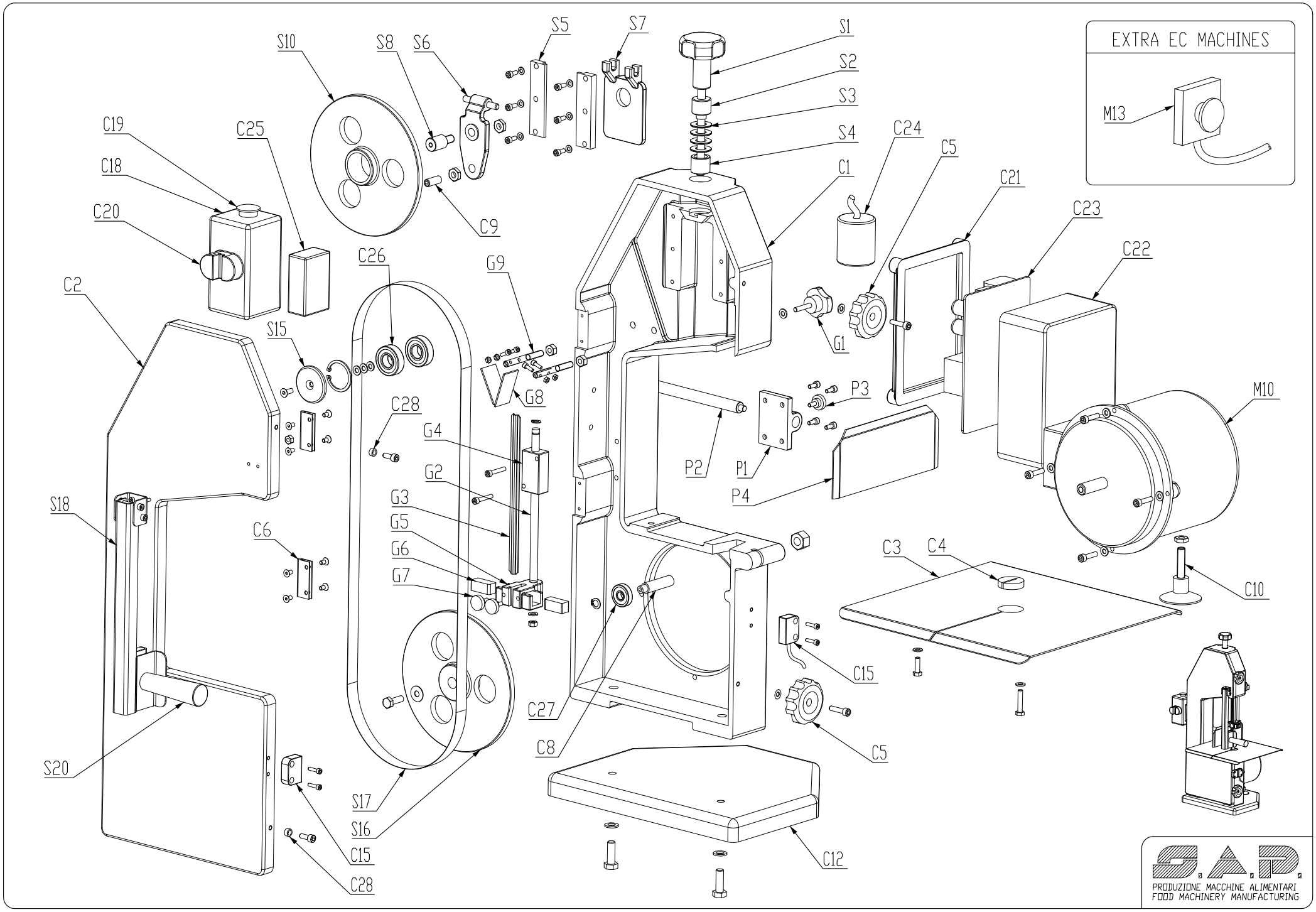
EXTRA EC MACHINES
M13
S1
S2
S3
S4
S5
S6
S7
S8
S10
S15
S16
S17
S18
S20
C1
C2
C3
C4
C5
C6
C8
C9
C10
C12
C15
C18
C19
C20
C21
C22
C23
C24
C25
C26
C27
C28
G1
G2
G3
G4
G5
G6
G7
G8
G9
P1
P2
P3
P4
M10
S.A.P.
PRODUZIONE MACCHINE ALIMENTARI
FOOD MACHINERY MANUFACTURING