MODEL	EVOLUTION	TABLE	DATE
MC6	1	1	01/10/01

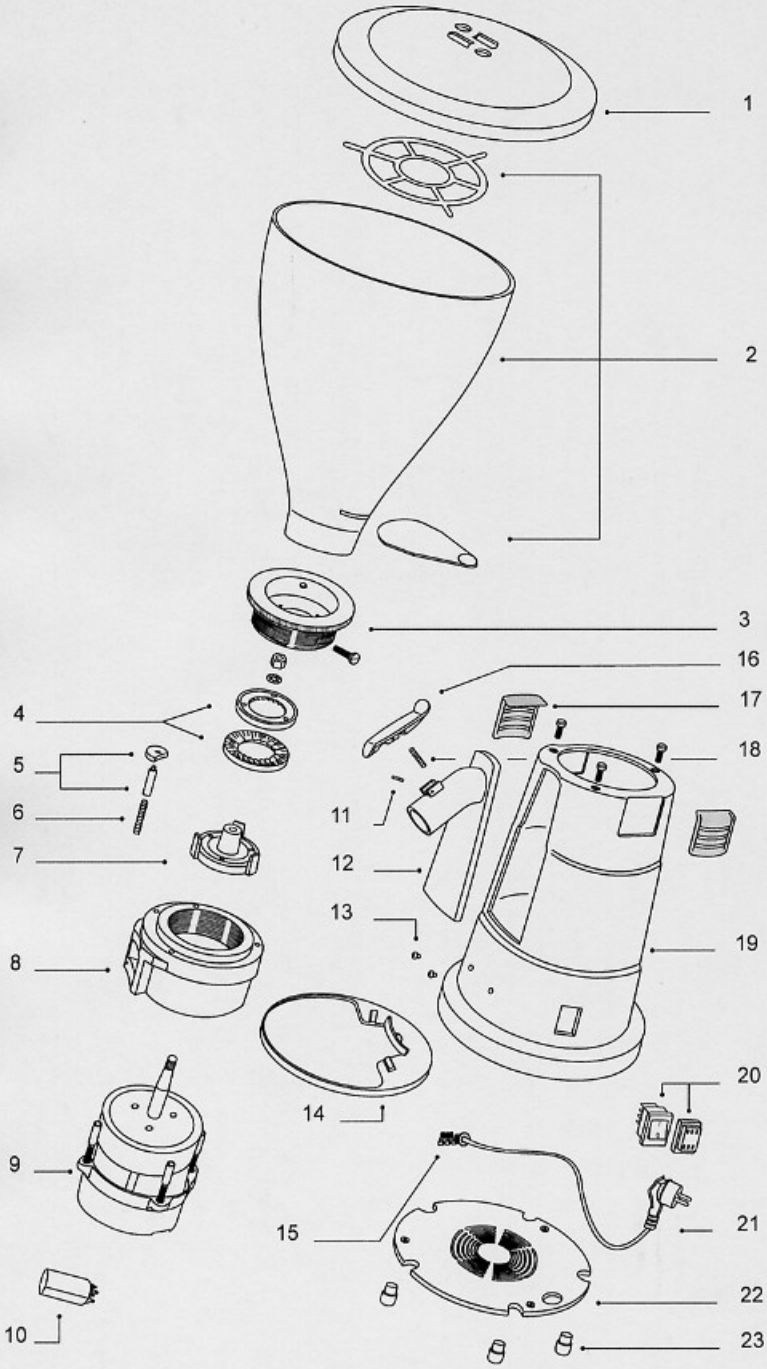

N.	Code	Caratteristics
1	C0007M114	
2	C0007M113	
3	C0002M101	
4	C0004M122	
5	C0002M102	
6	C0008M109	
7	C0002M104	
8	C0001M330	
9	C00061210	230V-50Hz
	C000612101	220V-60Hz
	C000612102	110V-60Hz
10	C00061107	230V-50/60Hz
	C00061108	110V-60Hz
11	C0004M118	
12	C0002M115	
13	C0007M108	
14	C0007M103	
15	C00061611	
16	C0002M117	
17	C0007M141	
18	C0008M112	
19	C0001M103	
20	C00061021	
21	C00061517	230V-50/60Hz
	C000615171	110V-60Hz
22	C0007M124	
23	C00071614	

	Descriptions

MACAP S.r.l. Via Toniolo 18 - 30030 - Maerne di Martellago - Venezia - Italy Tel.+39.041.5030466 Fax +39.041.5030477 info@macap.it