MACAP

| MODEL | EVOLUTION | TABLE | DATE |
|---|---|---|---|
| P100 - P102 /D /V | 1 | 1 | 01/10/2001 |

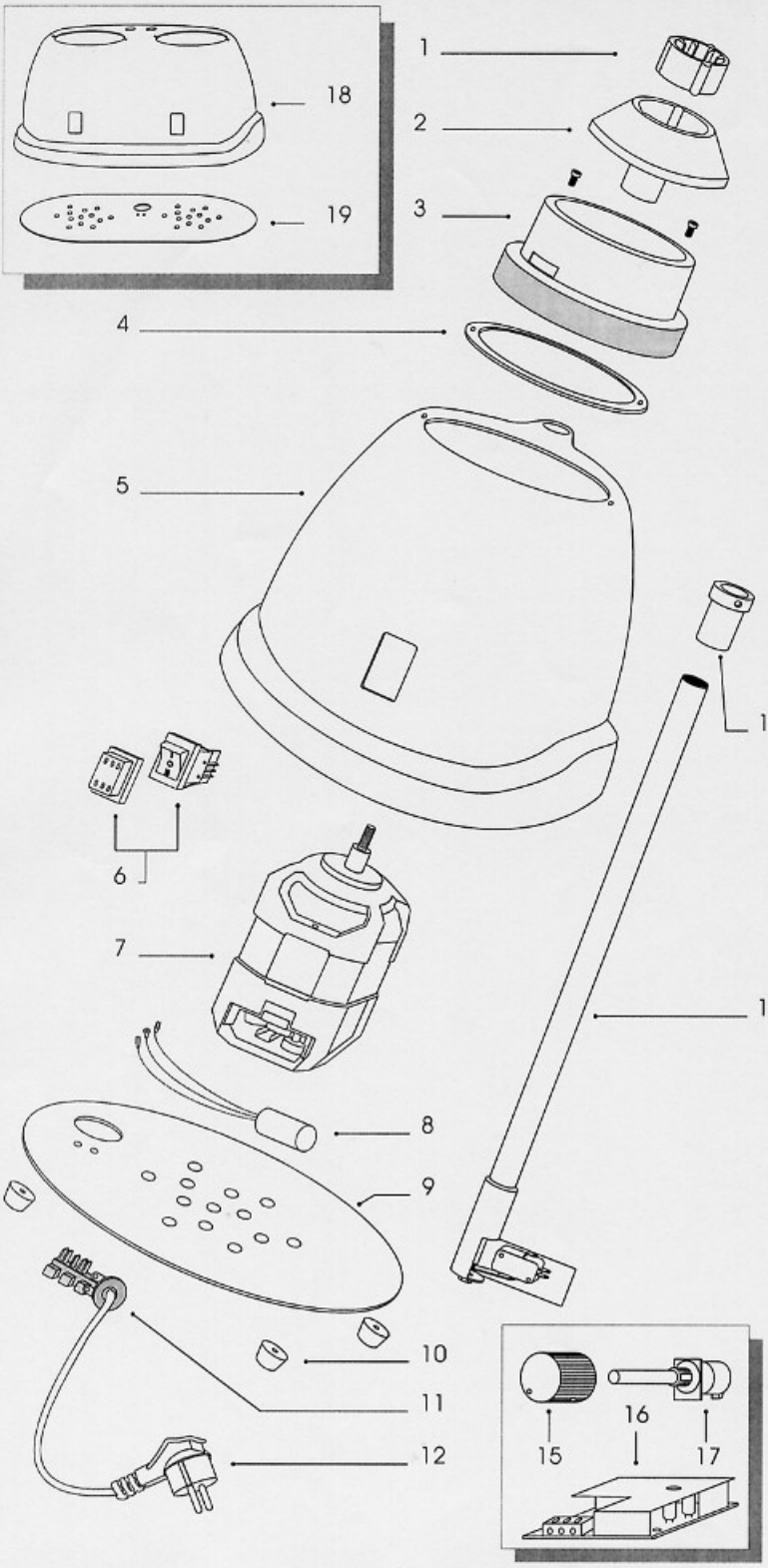


| N. | Code | Caratteristics |
|---|---|---|
| 1 | C0007F308 | |
| 2 | C0007F309 | |
| 3 | C0003F301 | |
| 4 | C0007F310 | |
| 5 | C0001F320 | |
| | C0001F320V | /V |
| 6 | C00061022 | |
| 7 | C00061215 | 230V-50/60Hz |
| | C000612151 | 110V-60Hz |
| 8 | C00061129 | |
| 9 | C0004F331 | |
| 10 | C00071616 | |
| 11 | C00061611 | |
| 12 | C00061517 | 230V-50/60Hz |
| | C000615171 | 110V-60Hz |
| 13 | C0004F353 | |
| 14 | C0004F357 | |
| 15 | C0001F345 | /V |
| 16 | C0006F310 | /V |
| 17 | C0006F311 | /V |
| 18 | C0001F325 | /D |
| 19 | C0004F330 | /D |

| | Descriptions |
|---|---|
| /D | double |
| /V | continuous variable speeds |

**MACAP S.r.l.** Via Toniolo 18 - 30030 - Maerne di Martellago - Venezia - Italy Tel.+39.041.5030466 Fax +39.041.5030477 info@macap.it