	TABLE	REV
	KI9112	01

ASCIUG.+KIT VAPORE K13

DRYING+STEAM KIT K13

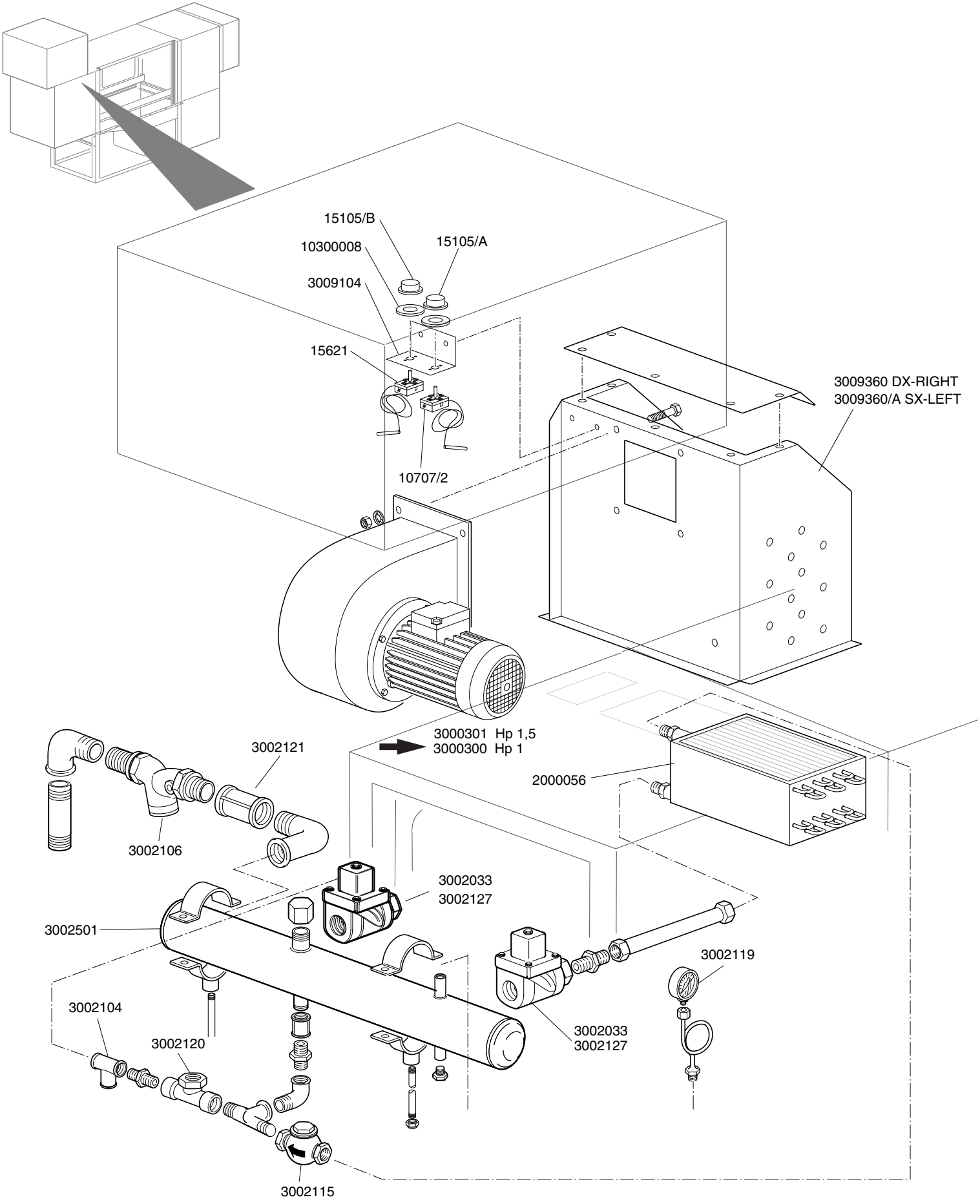

STEAM DRIYNG K13

TABLE KI9112

CODE	DESCRIPTION	CODE	DESCRIPTION
15621	120°thermostat		
2000056	Drying steam battery		
3000300	0,75HP motorfan		
3000301	602 1,5HP motorfan		
3002033	1/2" 24V.-50Hz steam valve		
3002104	T nipple		
3002106	Filter		
3002115	Non return valve		
3002119	Ø80 vertical steam gauge		
3002120	Relief valve		
3002121	Coupling		
3002127	1/2" open steam valve		
3002501	Collector		
3009104	Thermostat support		
3009360	Complete right drying conveyor		
10300008	Ferrule for thermostat		
10702/2	0-90°TR2 thermostat with shaft		
15105/A	0-90°thermostat handle		
15105/B	0-120 thermostat handle		
3009360/A	Complete left drying conveyor		