KROMO	TABLE KI1810	REV 02

DISHWASHER KP 200

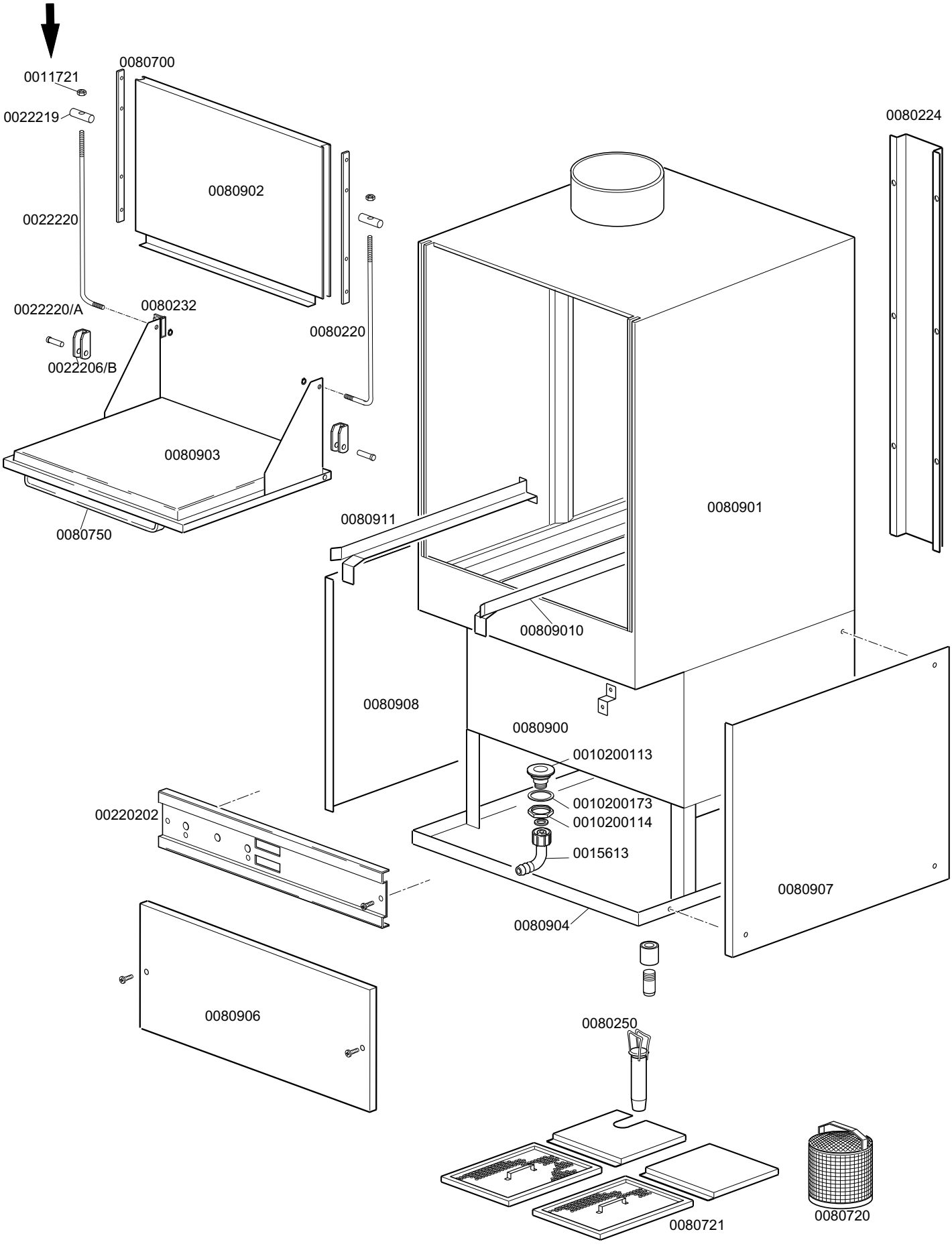

DISHWASHER KP 200

TABLE KI1810

CODE	DESCRIPTION	CODE	DESCRIPTION
0010200113	Floor Drain		
0010200114	Drain Pipe fitting nut		
0010200173	75x58x2 Gasket		
0011721	M6 stainless steel nut		
0015613	1"1/4 x 30 nylon elbow		
00220202	KP 200 neutral panel		
0022206/B	Hinge door KP 200		
0022219	KP 200 door cylinders kit		
0022220	Set of rods for KP 200		
0022220/A	Inox pin for door		
0080224	Rear Panel		
0080232	Magnet for reed		
0080250	Overflow device		
0080700	PVC slides for upper door		
0080720	KP 200 suction filter		
0080721	KP 200 surface filter		
0080750	KP 200 neutral stainless steel handle		
0080900	Stainless steel tub		
0080901	Top body		
00809010	Right guide for basket		
0080902	KP 200 top door		
0080903	KP 200 lower door		
0080904	Frame base		
0080906	KP 200 lower door		
0080907	KP 200 right lower panel		
0080908	KP 200 left lower panel		
0080911	Left guide for basket		

KROMO	TABLE KI1815	REV 06

DISHWASHER KP 200

From serial Nr.01028172 on

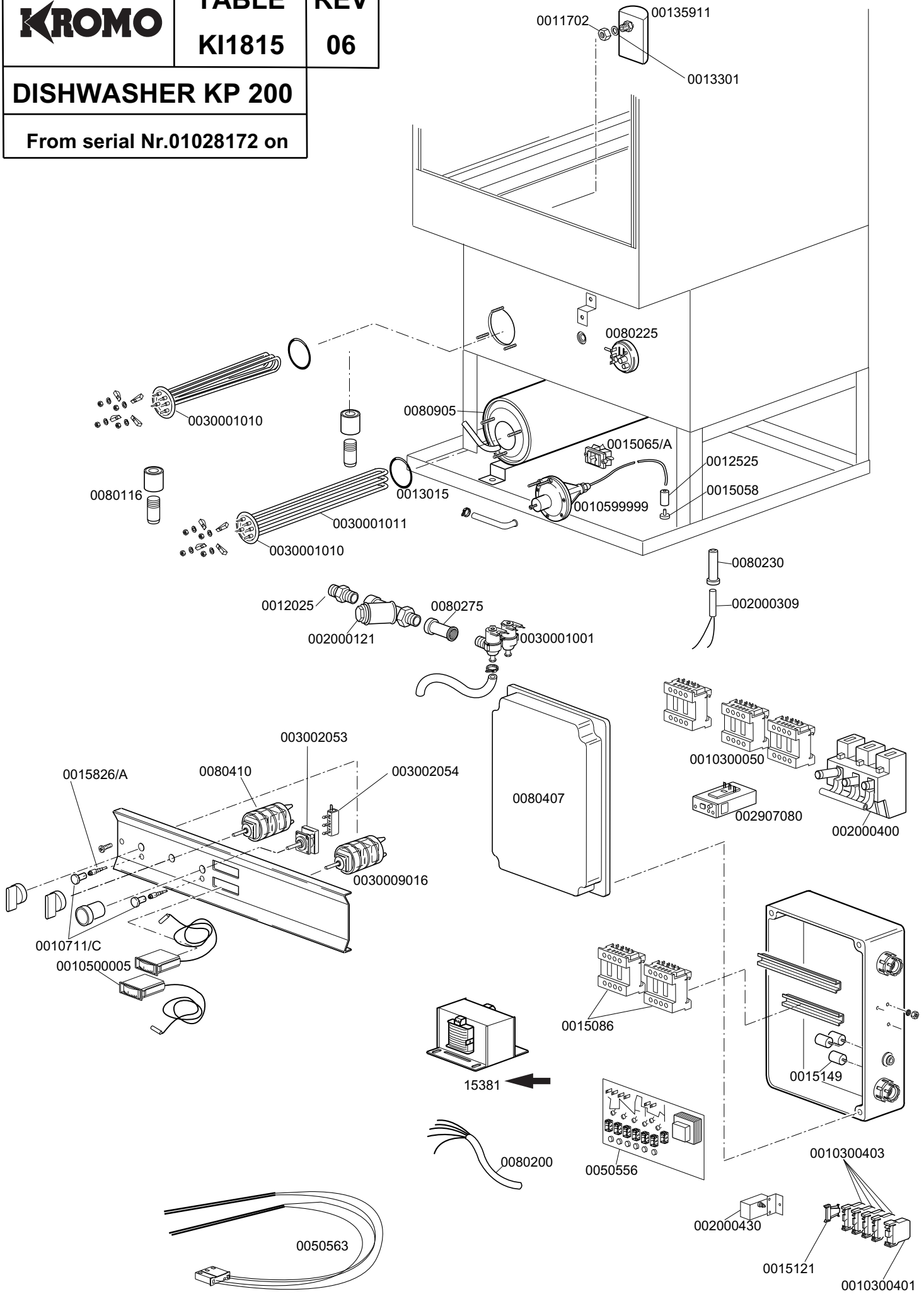

DISHWASHER KP 200

TABLE KI1815

CODE	DESCRIPTION	CODE	DESCRIPTION
0010300050	25A 4NA 220V 50hz remote control switch		
0010300401	6 mm2 yellow green clamp		
0010300403	6 mm2 clamp		
0010500005	Thermometer		
0010599999	Shining product dosing device		
0010711/C	13 D. complete pilot lamp		
0011702	M8 stainless steel nut		
0012025	Nipple gas/cilin. 3/4" M-M		
0012525	Counter weigth for small filter		
0013015	Boiler heating element OR gasket		
0013301	14x8x1.5 d. gasket		
00135911	Complete air trap		
0015058	Small shining product suction filter		
0015065/A	4228B cable fastener with screw		
0015086	230v 50/60 hz remote control switch		
0015121	Remote control switch holder clamp		
0015149	Low noise filter F3		
→ 0015381	150VA 0/400-415-440 - 0/230V Trasformer		
0015826/A	Transparent light 12/14 V		
002000121	3/4" FF/MF gas bronze "Y"filter		
002000309	Reed economiser		
002000400	3,2-5 A Thermal protection		
002000430	Conveyor safety thermostat		
002907080	6-10 A relay		
0030001001	90 d. 14 double solenoid valve		
0030001010	6 KW boiler heating element		
0030001011	9 KW boiler heating element		
0030009016	0204/GZ22 main switch		
003002053	31B3 green push button		
003002054	1NA contact		
0050556	3-6-9min. electronic timer		
0050563	LP2/LP3 thermostat filter		
0080116	2" H130 small foot		
0080200	5x4x3400 power supply cable		
0080225	KP 200 pressure switch		
0080230	Reed-holder pipe		
0080275	3/4" F-F pipe coupling		
0080407	Plastic box		
0080410	5 position selector KP 200		
0080905	KP 200 boiler		

KROMO	TABLE KI1830	REV 04

DISHWASHER KP 200

From serial Nr.01020684 on

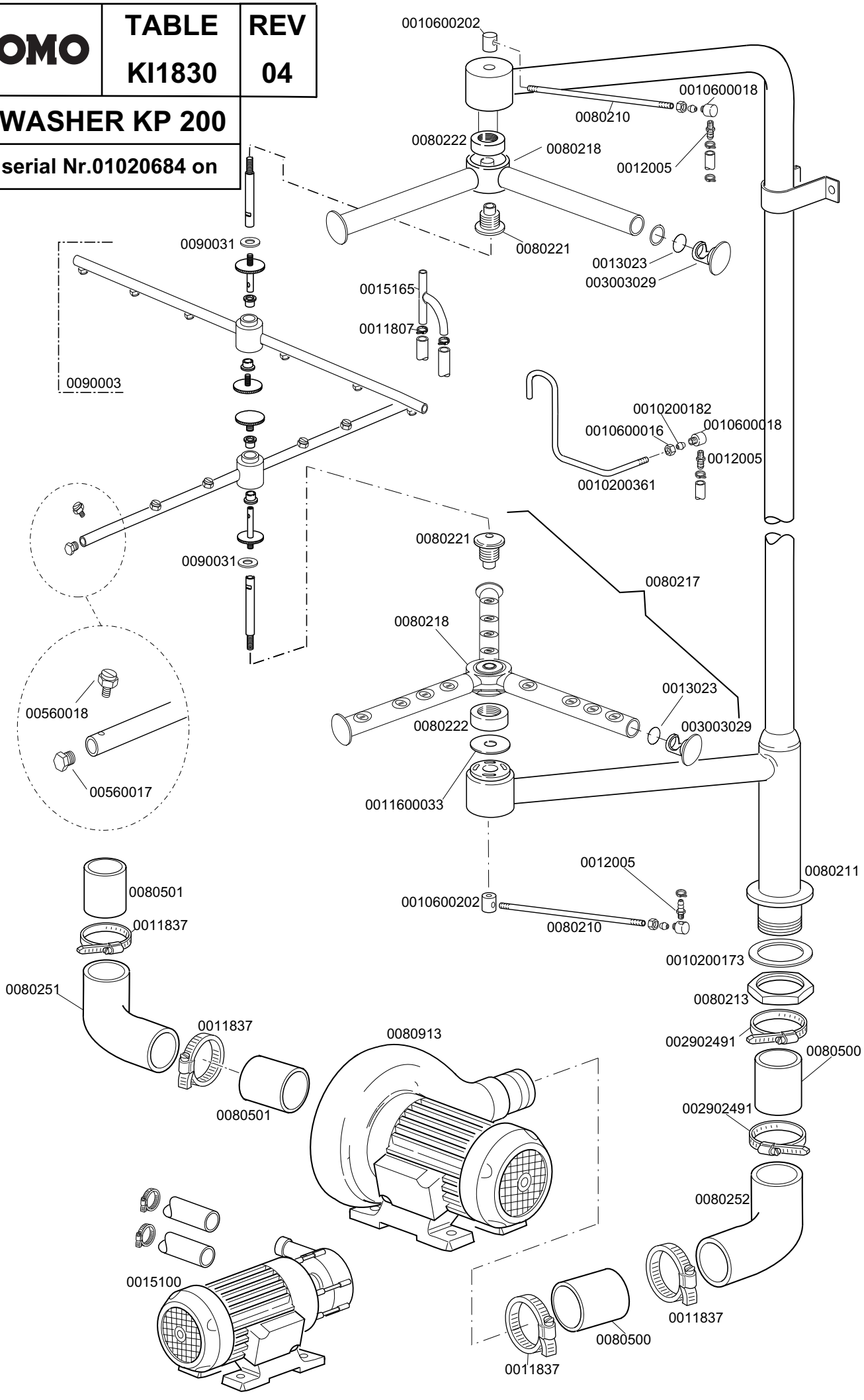

DISHWASHER KP 200

TABLE KI1830

CODE	DESCRIPTION	CODE	DESCRIPTION
0010200173	75x58x2 gasket		
0010200182	12 double cone		
0010200361	Tub load pipe		
0010600016	Rinse clutch 3/8" nut		
0010600018	Rinse entry pipe fitting		
0010600202	Rinse elbow		
0011600033	48x16 stainless steel washer		
0011807	12/20 stainless steel clamps		
0011837	80-100 clamps		
0012005	1/4 rubber holder for 10d. pipe		
0015100	Pressure increase pump		
0015165	3 way derivation d. 13		
002902491	60-80 clamp		
003003029	Wash-arm cover		
00560017	Cover for rinse arm M9x1		
00560018	Stainless steel rinse jet M5		
0080210	KP 200 rinse collector		
0080211	KP 200 wash ramp		
0080213	Connection fixing ramp		
0080217	Wash stainless steel rotating arm assembly		
0080221	KP 200 complete hub for wash arm		
0080222	Shaft nut for wash arm		
0080251	KP 200 stainless steel suction elbow		
0080252	Stainless steel elbow		
0080500	York 63,5x73,5 pipe		
0080501	York 76x94 pipe		
0080913	KP 200 hp4 220-380 3ph. pump		
008218	Wash stainless steel rotating arm		
0090003	Sliding washer for rinse jet M5		
0090031	Sliding washer for rinse arm		
013023	OR-131 gasket		