| | TABLE KI9150 | REV 01 |
|---|---|---|
| OPTIONAL VAPORE | | |
| OPTIONAL STEAM | | |

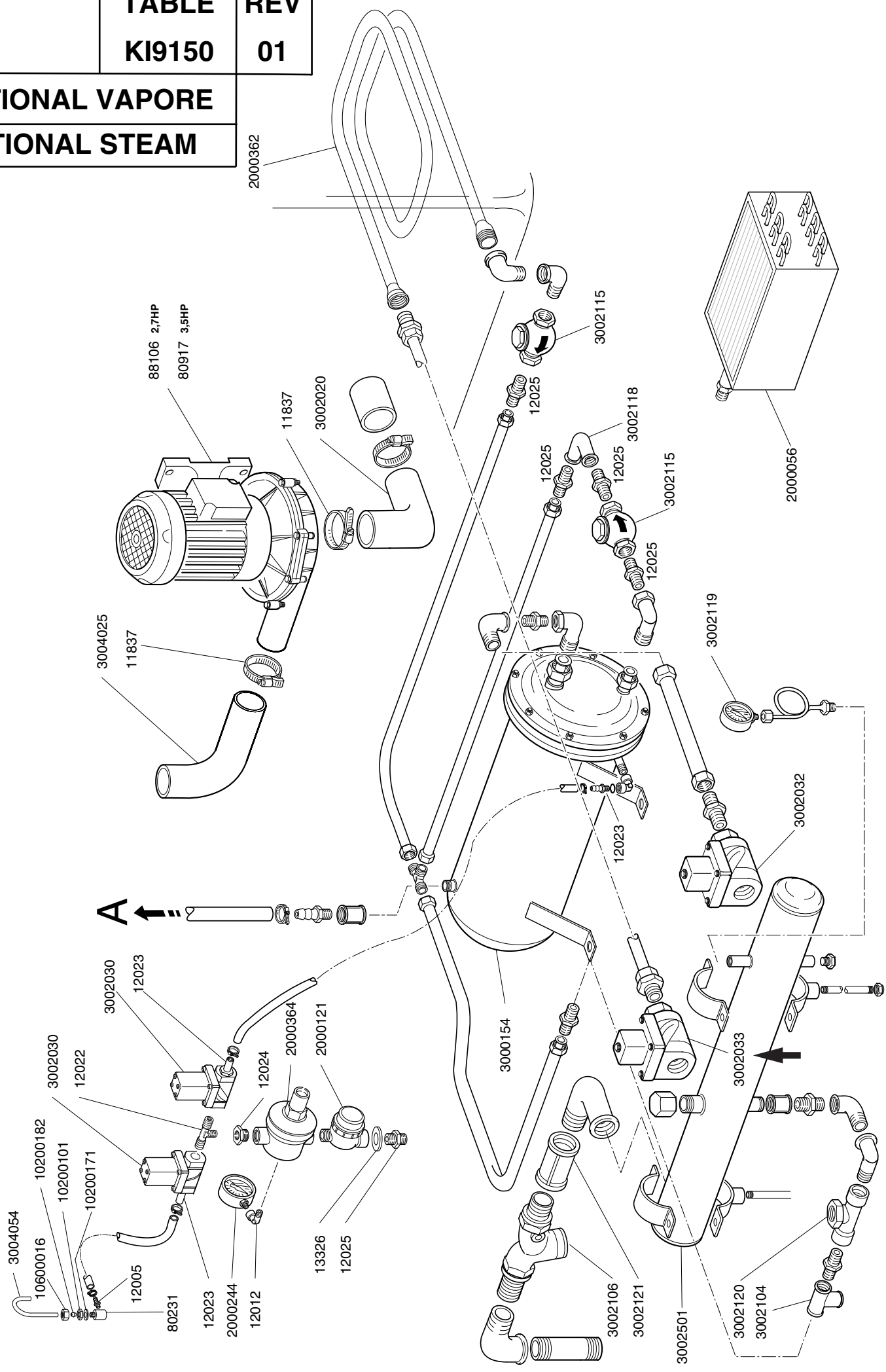

# STEAM OPTIONAL

TABLE
KI9150

| CODE | DESCRIPTION | CODE | DESCRIPTION |
|---|---|---|---|
| 11837 | Stainless steel clamp 80-100 | | |
| 12005 | Hose holder 1/4for pipe d.12 | | |
| 12012 | Elbow M-F 1/4 | | |
| 12022 | Union tee 1/2 MM | | |
| 12023 | Hose holder M 1/2 | | |
| 12024 | Reduction nipples 1/2F-3/4M | | |
| 12025 | Nipples 3/4 MM | | |
| 13326 | 38x27x2 Gasket | | |
| 80231 | Inlet pipe union | | |
| 80912 | Pump 3,6HP 220-400V 50Hz | | |
| 88106 | Pump 2,7HP dx 220-400V 50Hz | | |
| 2000121 | Water load line filter | | |
| 2000244 | Pressure reducer gauge | | |
| 2000362 | Steam pipe coil d.18 | | |
| 2000364 | Pressure reducer for stainl. steel filter 3/4" | | |
| 3000154 | Steam boiler | | |
| 3002020 | Elbow coupling EPDM d.60 | | |
| 3002030 | Solenoid valve OT58 1/2 24V | | |
| 3002032 | Steam solenoid valve 1" 24V | | |
| 3002033 | Steam "open" solenoid valve 1/2" | | |
| 3002104 | Chromium-plated union tee | | |
| 3002106 | FF 1" 1/2 pipe fitting | | |
| 3002115 | Check valve GJ 3/4 | | |
| 3002118 | Chromium-plated FF elbow 3/4 | | |
| 3002119 | Vertical steam gauge d.80 | | |
| 3002120 | Thermostat drain 13BAR 3/4" | | |
| 3002121 | 1" 1/2 Coupling | | |
| 3002501 | Steam and drying header | | |
| 3004025 | L-shaped delivery coupling 50/50 | | |
| 3004054 | Tank water inlet pipe | | |
| 10200171 | FASIT 25x17x2 Gasket | | |
| 10200182 | Biconic washer 12 | | |
| 10600016 | Rinse coupling 3/8" nut | | |