KROMO	TABLE KI5611	REV 00
BK5		

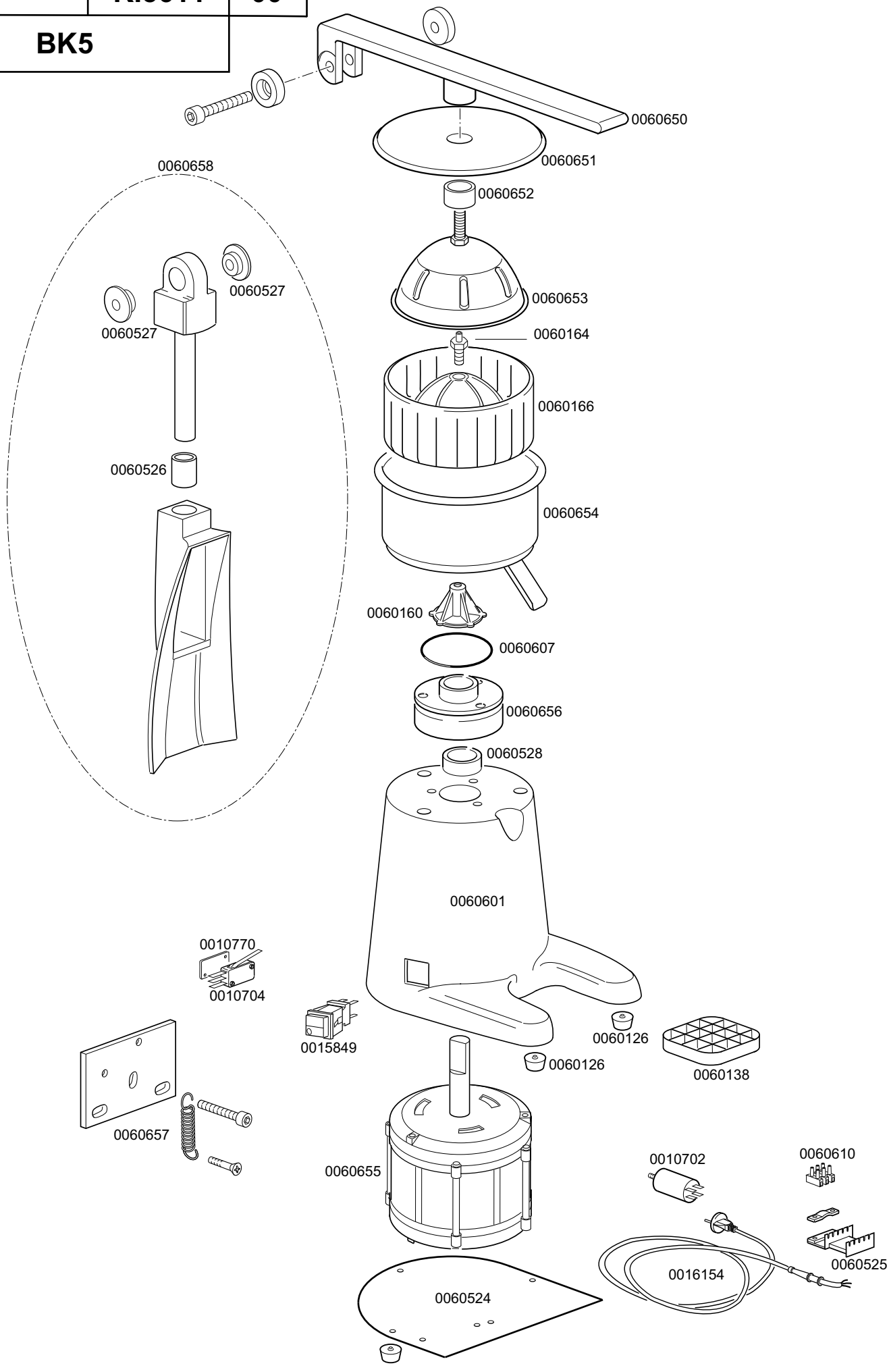

FRUIT-JUICE SQUEEZER BK5

TABLE
KI5611

CODE	DESCRIPTION	CODE	DESCRIPTION
0010702	5 Microfarad 450V condenser		
0010704	Door safety microswitch		
0010770	Insulator for microswitch		
0015849	Single switch green push button		
0016154	Power supply cable		
0060126	Rubber small foot		
0060138	Glasses holder		
0060160	Undersqueezer		
0060164	Right screw for cone		
0060166	Complete cone		
0060524	Bottom protection		
0060525	Presscable		
0060526	Nylon nut for shaft hinge		
0060527	Nylon nut for head hinge		
0060528	15x24x7 rubber top		
0060601	Die-cast from work		
0060607	OR gasket for basing		
0060610	Terminal board		
0060650	Fruit-juice squeezer lever		
0060651	Fruit-juice squeezer cover		
0060652	Cover nut		
0060653	Counter cone		
0060654	Basing		
0060655	Engine		
0060656	Cone base		
0060657	Spring for lever		
0060658	Complete shaft hinge		