016.40.121 1211 271099 DONADINI & C

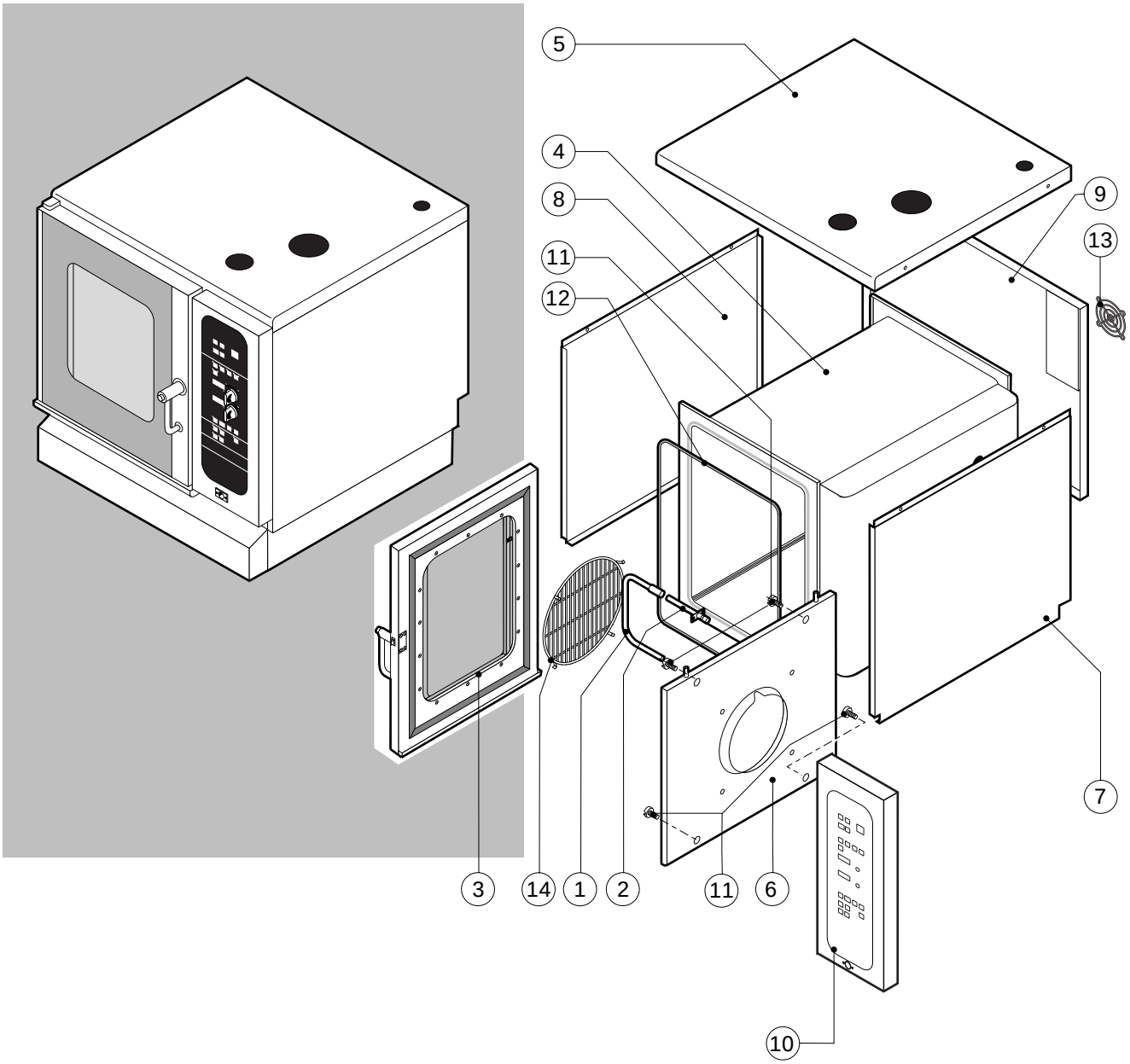

POS.	CODE	PIECES	DESCRIPTION
1	R10206470	1	SPRITZER EXTENSION
2	R10206540	1	SPRITZER UNION
3	R14100300	1	DOOR ASSEMBLY WITH LIGHTS
4	R14200020	1	COOKING CABINET ASSEMBLY
5	R14200390	1	COVER PANEL
6	R14200850	1	FAN GUARD PANEL ASSEMBLY
7	R14201450	1	RIGHT SIDE PANEL
8	R14201460	1	LEFT SIDE PANEL
9	R14201600	1	REAR PANEL
10	R14202890	1	CONTROL PANEL
11	R58006400	4	FAN GUARD FASTENING SCREW
12	R70042860	1	FRONT GASKET
13	R75300020	1	FAN GUARD GRID Ø 120
14	R75300030	1	FAN GUARD GRID Ø 190

POS.	CODE	PIECES	DESCRIPTION

016.40.121 1212 271099 DONADINI & C

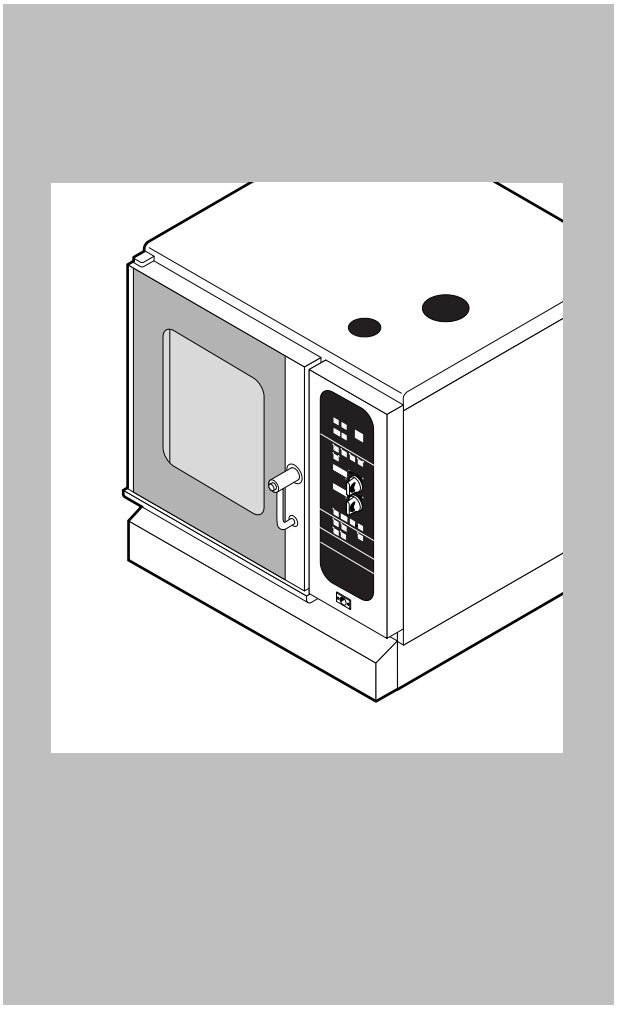

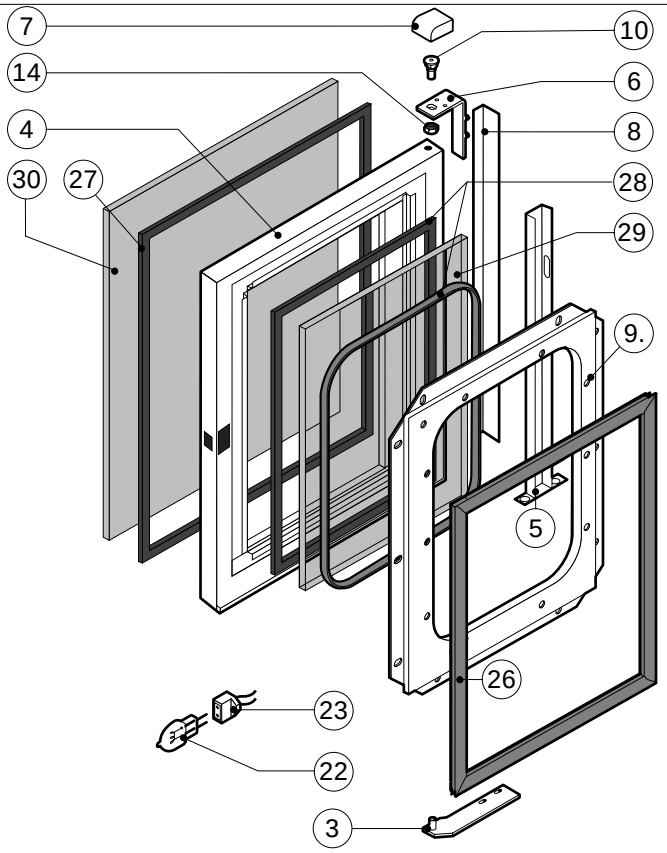

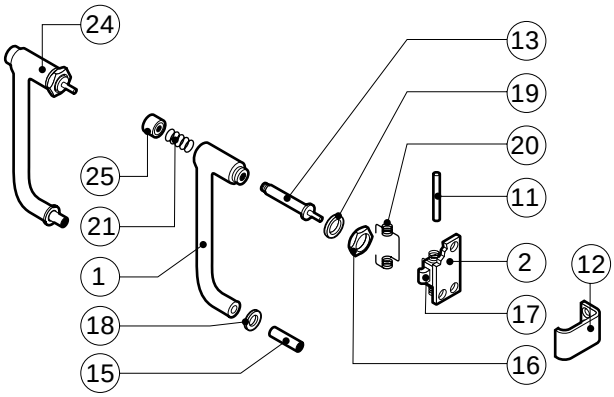

POS.	CODE	PIECES	DESCRIPTION
1	R09200230	1	DOOR HANDLE
2	R10100110	1	PRONG FLANGE
3	R12212250	1	LOWER DOOR HINGE
4	R14200700	1	DOOR
5	R14200780	1	LEFT LAMP COVER
6	R14200820	1	UPPER DOOR HINGE
7	R14200830	1	DOOR HINGE COVER
8	R14400560	1	LEFT GLASS FIXING BRACKET
9	R14400570	1	INNER DOOR PANEL
10	R58002150	1	HINGE PIN
11	R58002160	1	DOOR HANDLE PRONG PIN
12	R58002760	1	DOOR HANDLE PRONG COUPLER
13	R58003500	1	DOOR HANDLE BUTTON ROD
14	R58004050	1	NUT FOR UPPER DOOR HINGE
15	R58004320	1	DOOR HANDLE SPACER
16	R58004830	1	RING NUT M18x1
17	R58005050	1	DOOR HANDLE PRONG
18	R58005340	1	DOOR HANDLE LOWER INSULATION WASHER
19	R58005350	1	DOOR HANDLE UPPER INSULATION WASHER

POS.	CODE	PIECES	DESCRIPTION
20	R61620012	1	DOOR HANDLE CATCH SPRING
21	R61620041	1	DOOR HANDLE BUTTON SPRING
22	R65270020	1	LIGHT 20W 12V G4
23	R65270400	1	LIGHT SOCKET
24	R69015080	1	DOOR HANDLE ASSEMBLY
25	R69031190	1	DOOR HANDLE PUSH BUTTON
26	R70042560	1	DOOR GASKET
27	R70042660	1	FRONT GLASS GASKET
28	R70042760	1	REAR GLASS GASKET
29	R71200070	1	DOOR GLASS
30	R71200720	1	DOOR GLASS

016.40.121 1213 271099 DONADINI & C

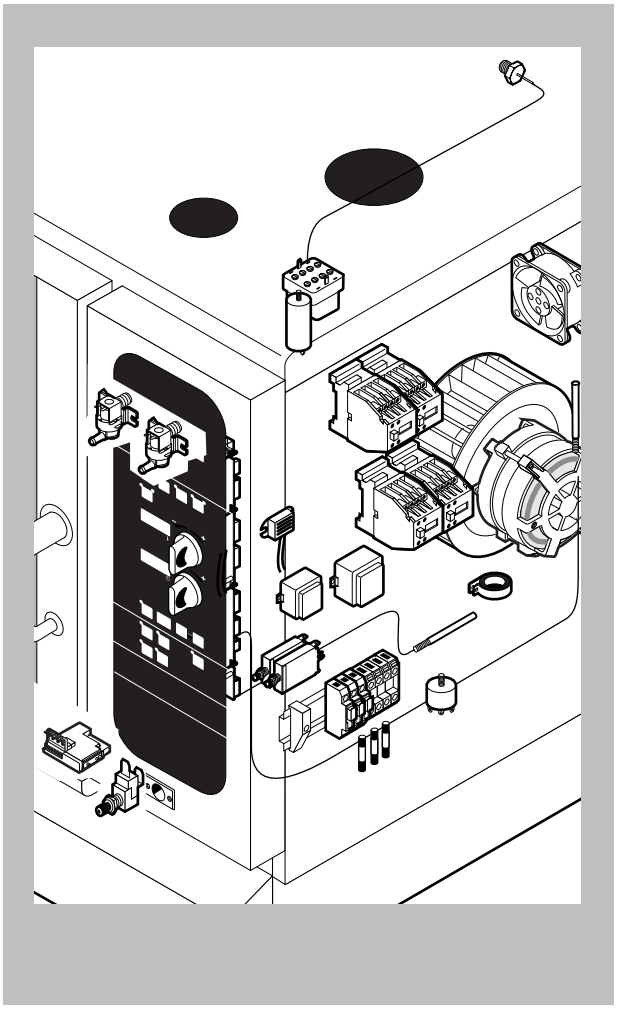

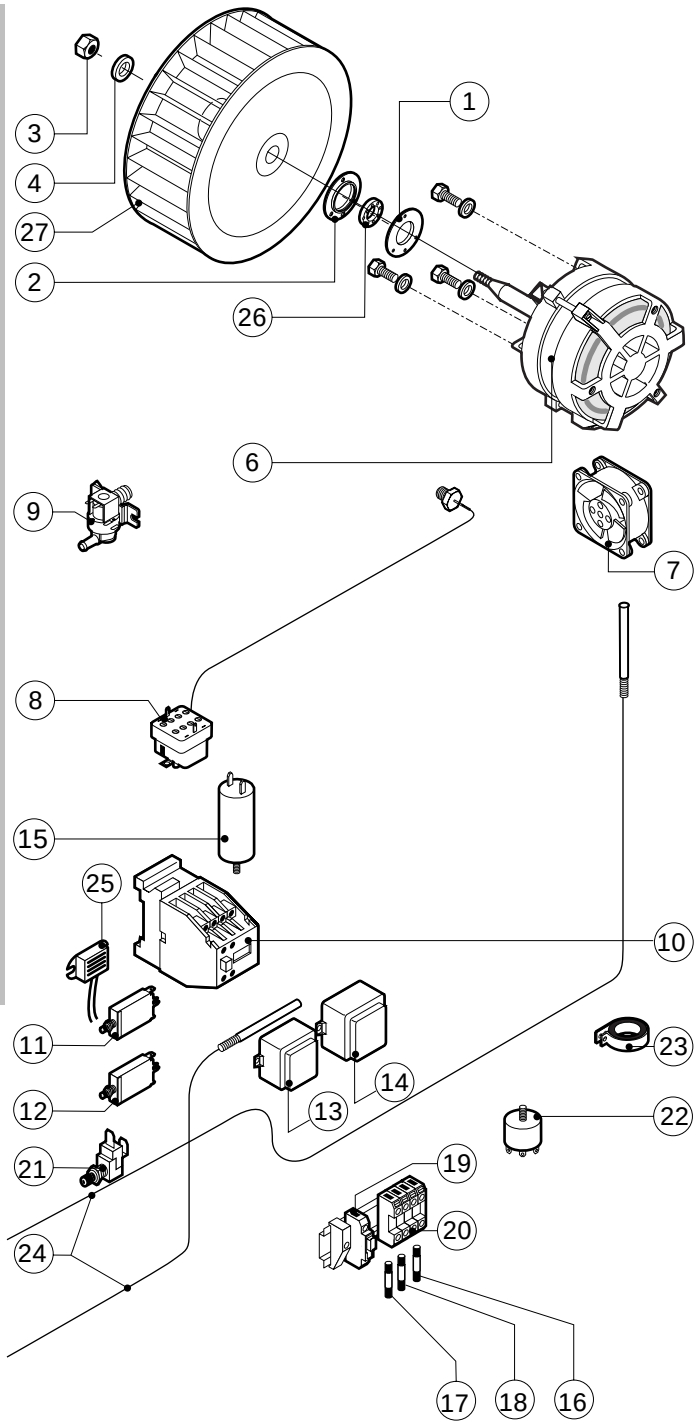

POS.	CODE	PIECES	DESCRIPTION
1	R58003860	1	MOTOR GASKET BRASS FLANGE
2	R58003870	1	MOTOR GASKET BRASS COUNTER FLANGE
3	R58004020	1	FAN SECURITY NUT M10 SX
4	R61400052	1	FAN WASHER Ø 21/10.5
5	R63060100	1	BURNER IGNITION PANEL
6	R65040430	1	MOTOR 0.37/0.05 KW KIT
7	R65060050	1	COMPONENTS VENTILATION MOTOR Ø 120
8	R65070070	1	CHAMBER SAFETY THERMOSTAT
9	R65110010	2	SOLENOID VALVE 220V 50HZ
10	R65140150	4	CONTACTOR 3TF4011-OAUO 240V
11	R65160300	1	THERMIC PROTECTION T12-2115-0.8A
12	R65160310	1	THERMIC PROTECTION T12-2115-2.5A
13	R65180420	1	TRANSFORMER 20VA
14	R65180650	1	TRANSFORMER 23VA
15	R65190180	1	CAPACITOR 10 µF
16	R65200086	1	FUSE 0.125A (T)
17	R65200200	1	FUSE 2A
18	R65200320	1	FUSE 0.2A (T)
19	R65210020	3	FUSE CARRIER

POS.	CODE	PIECES	DESCRIPTION
20	R65220220	1	TERMINAL BOARD
21	R65260540	1	DOOR SWITCH
22	R65280210	1	INTERFERENCE SUPPRESSOR
23	R65280450	1	FERRITE
24	R65325000	2	PROBE PT100
25	R65330020	1	BUZZER
26	R70020040	1	MOTOR GASKET
27	R75400400	1	FAN Ø 220x78/12 50HZ P.D. KIT

016.40.121 1214 271099 DONADINI & C

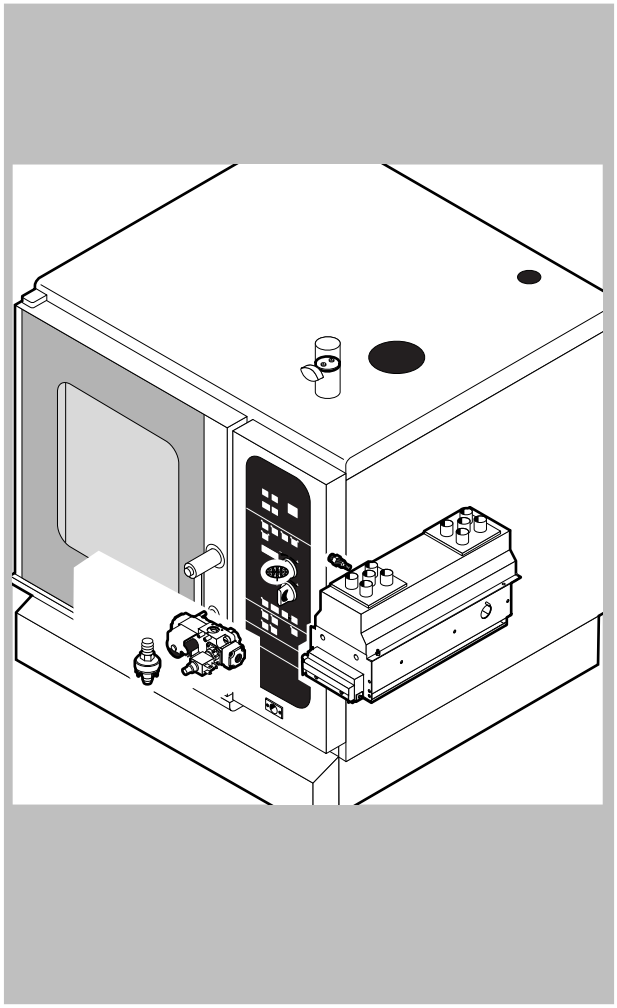

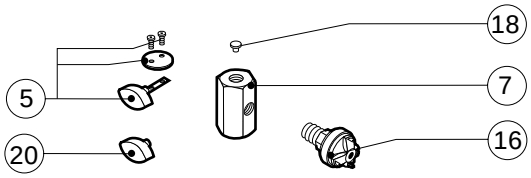

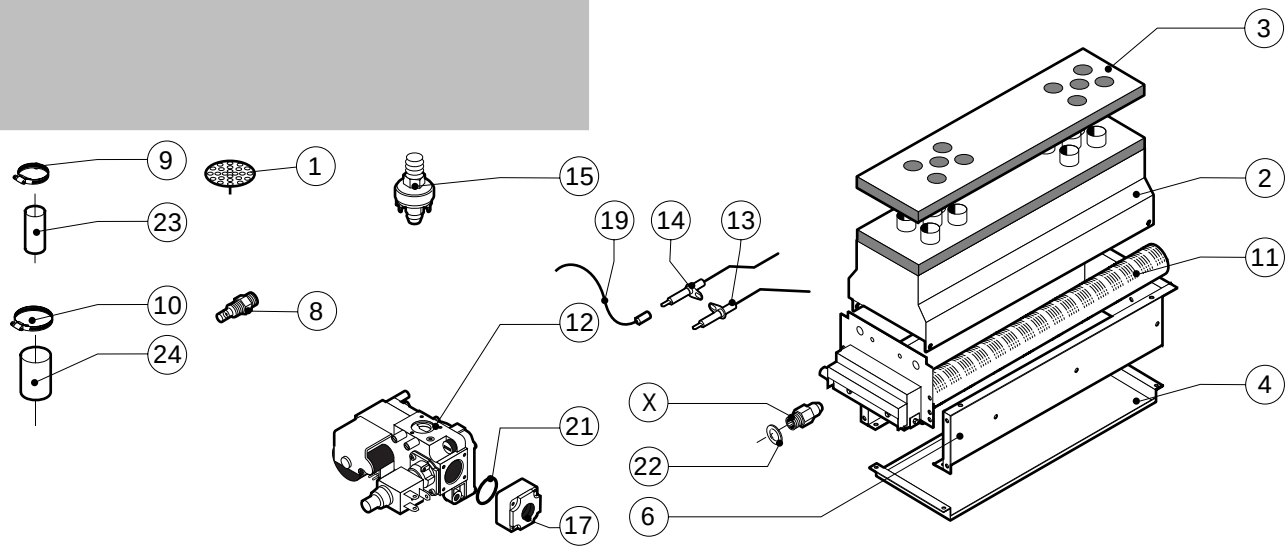

POS.	CODE	PIECES	DESCRIPTION
1	R10201700	1	DRAIN FILTER
2	R10202400	1	COMBUSTION CABINET
3	R10402390	1	COMBUSTION CABINET INSULATION PLATE
4	R10403790	1	CHAMBER BURNERS PROTECTION PLATE
5	R14201410	1	STEAM OUTLET THROTTLE ASSEMBLY
6	R14202300	1	CABINET BURNERS SUPPORT
7	R58003390	1	PRESSURE SWITCH BRASS PIPE FITTING
8	R58006090	1	STEAM QUENCHING NOZZLE Ø 1
9	R61630011	6	METAL CLAMPS 12-22/9
10	R61630081	2	METAL CLAMPS 20-32/9
11	R63016500	1	CHAMBER BURNER ASSEMBLY
12	R63020160	1	GAS SOLENOID VALVE
13	R63050300	1	IGNITOR
14	R63050310	1	SENSOR
15	R63070010	1	GAS SAFETY PRESSURE SWITCH PG 901.61
16	R63070050	1	WATER SAFETY PRESSURE SWITCH 1/8" 0.5-0.35 BAR
17	R63080040	2	STRAIGHT FLANGE 1/2"
18	R65110420	1	FLOW REDUCER
19	R66605900	2	FLAME IGNITION CABLE/FLAME SENSOR CABLE
20	R69010410	1	STEAM OUTLET KNOB

POS.	CODE	PIECES	DESCRIPTION
21	R70010070	2	RING
22	R70030090	2	NOZZLE GASKET
23	R70060080	1	SILICON COUPLING Ø 13
24	R70060090	2	SILICON COUPLING Ø 25
X		2	NOZZLE (See service manual)

016.40.121 1215 271099 DONADINI & C

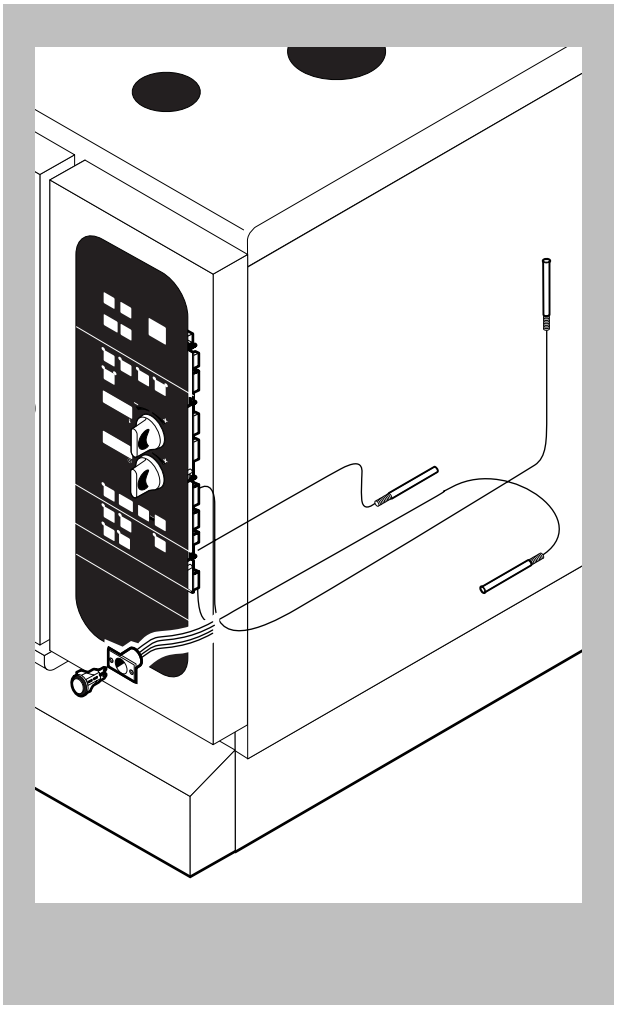

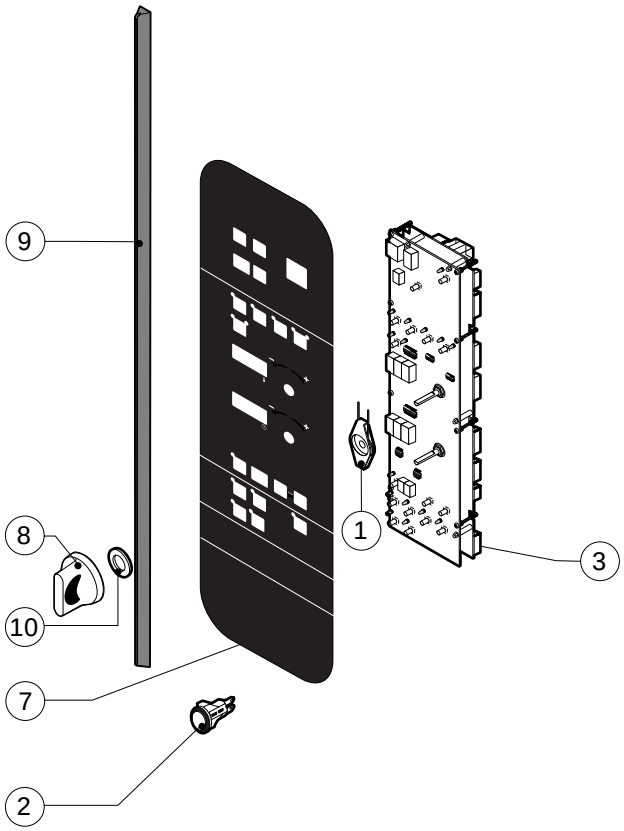

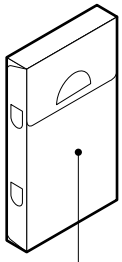

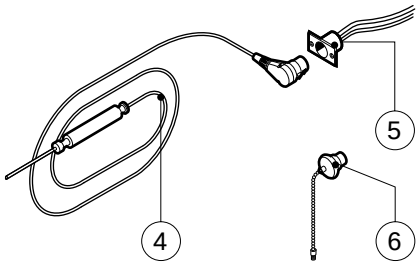

POS.	CODE	PIECES	DESCRIPTION
1	R10205120	2	KNOB SPRING
2	R65260480	1	UNIPOLAR PUSH BUTTON
3	R65300820	1	CONTROL PANEL P.C. BOARD
4	R65320900	1	CORE TEMPERATURE PROBE
5	R65320920	1	CORE TEMPERATURE PROBE FEMALE CONNECTOR
6	R65321020	1	COVER FOR FEMALE CONNECTOR
7	R67401240	1	MARENO PLATE
8	R69030170	2	KNOB KIT
9	R70042960	1	CONTROL PANEL GASKET
10	R70050020	4	KNOB GASKET
11	R86020420	1	CORE TEMPERATURE PROBE BOX

POS.	CODE	PIECES	DESCRIPTION